Antarctica Research Tower

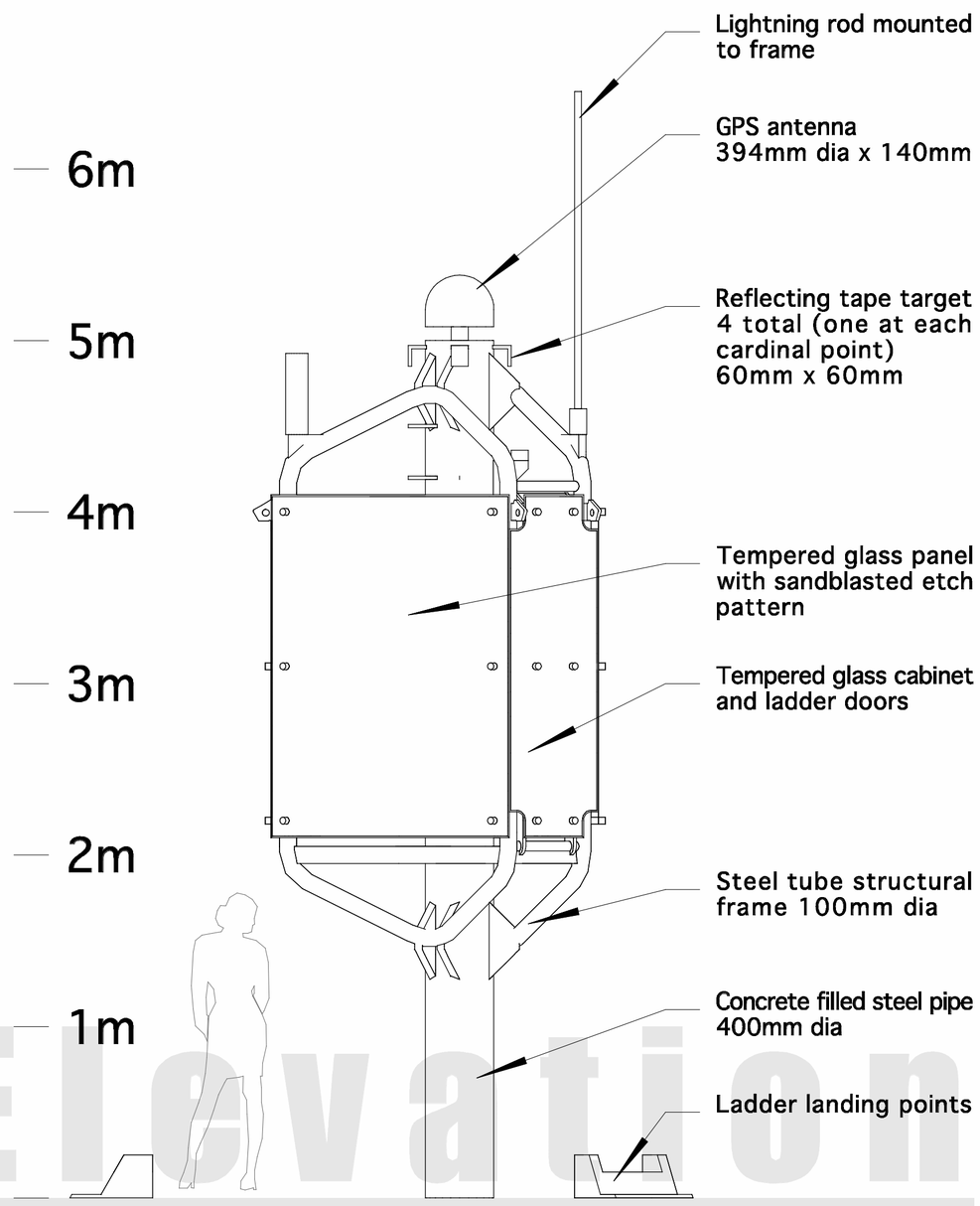

Elevation

Normal use

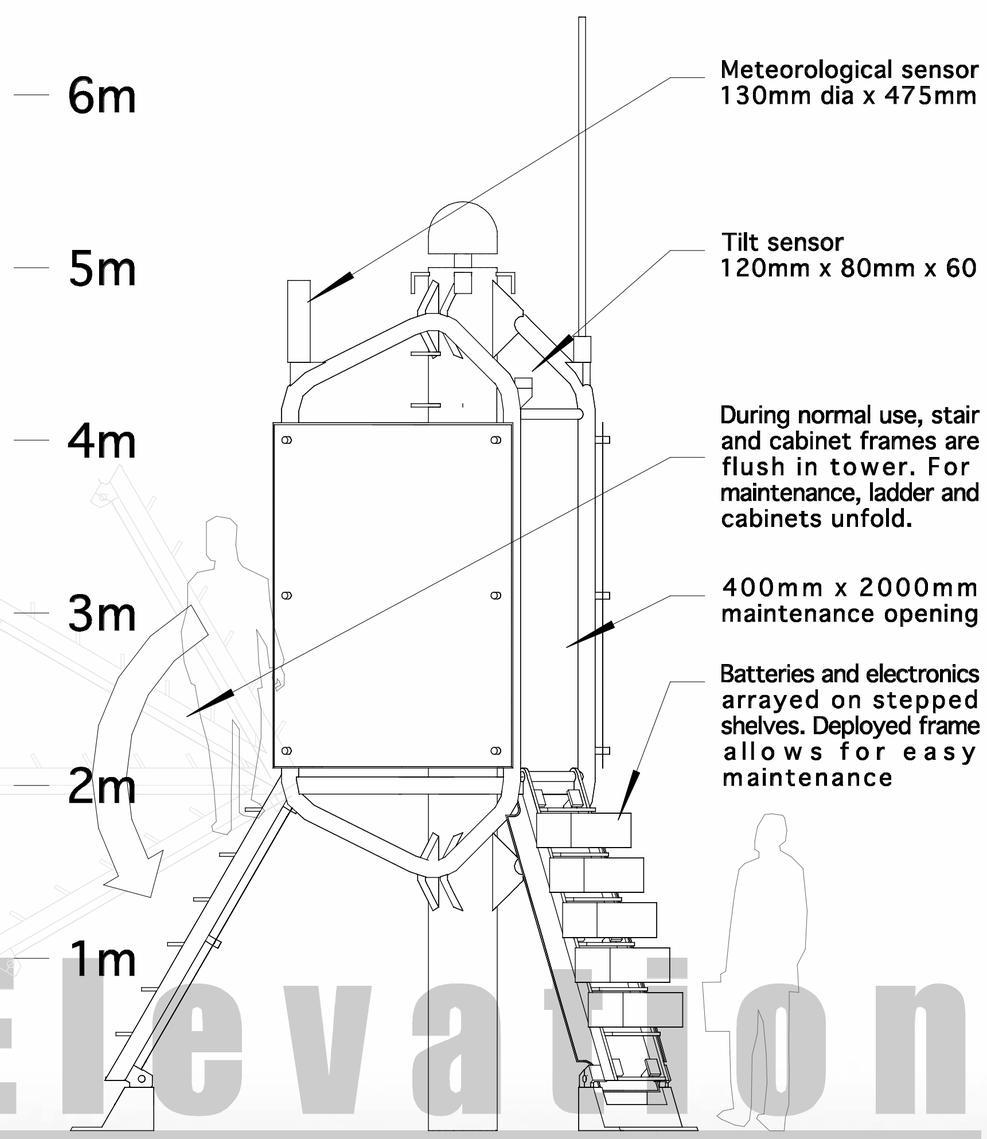

Elevation

Maintenance mode

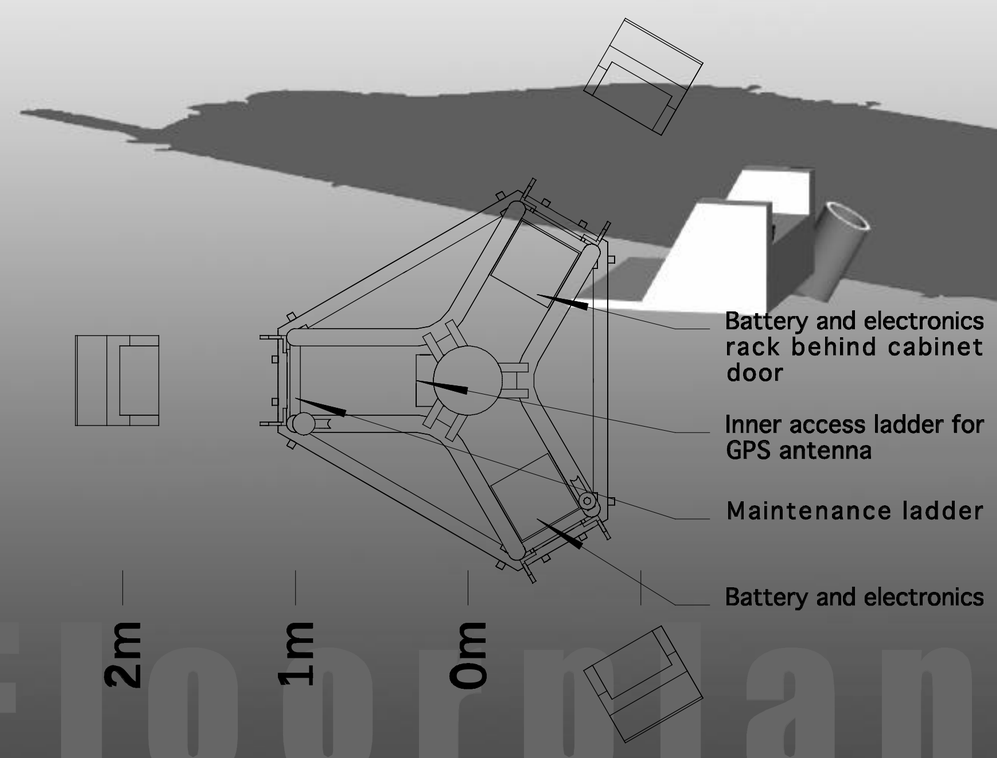

Floorplan

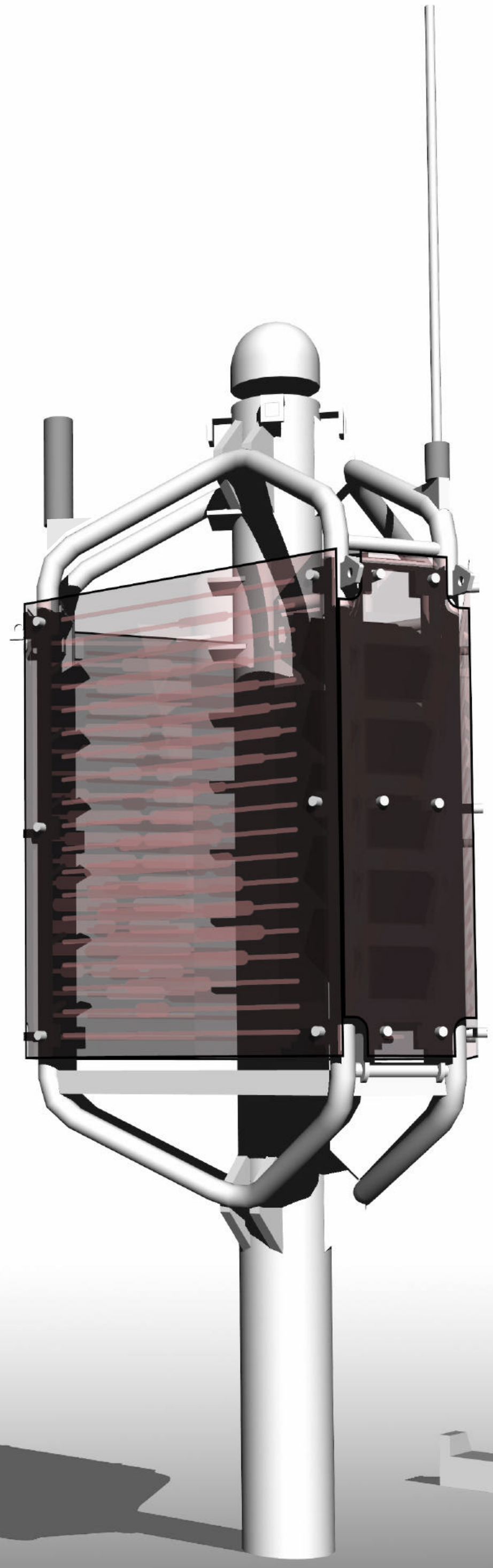

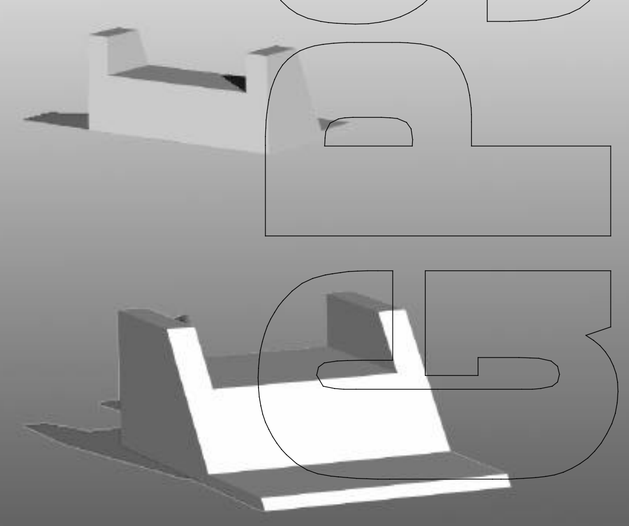

A. Scott Howe, Architect

May 2003